# INCREASING THE ROBUSTNESS OF THE BAYESIAN ANALYSIS

**Francesca MARSILI**
PhD student
University of Pisa (IT)/
TU Braunschweig (G)
francesca.marsili@unifi.it

**Pietro CROCE**
Professor
University of Pisa
Pisa, Italy
p.croce@ing.unipi.it

**Martina MUZZI**
Engineer
University of Pisa
Pisa, Italy
martina.muzzi27@gmail.com

**Elisa ROSSO**
Engineer
University of Pisa
Pisa, Italy
elisarosso84@gmail.com

**Maria L. BECONCINI**
Professor
University of Pisa
Pisa, Italy
ml.beconcini@ing.unipi.it

## Summary

The reliability assessment of heritage structures represents a complex issue beyond traditional assessment procedures. Probabilistic methods and Bayesian updating techniques are often invoked in order to estimate the actual probability of failure. However a factor that should be considered is the potential bias arising with the refinement of probabilistic models. The bias may be significant if the structure has been altered during its working life and it may lead to undependable reliability assessment. In this paper a procedure that increases the robustness of the Bayesian analysis for the reliability assessment of historical buildings is presented. At the same time the process exploits probabilistic methods in order to better identify structural alteration. A practical application to a relevant case study is finally presented.

**Keywords**: Reliability assessment, heritage structures, Bayesian analysis.

## 1. Introduction

Environmental, economic, socio-political reasons and sustainability reasons call for a progressive and rapid extension of significance and field of application of existing structures assessments, also in view of preservation of cultural heritage.

The reliability assessment of existing buildings is a process affected by uncertainties; nowadays uncertainties in random basic variables are handled in a simplified way through partial factors. Since the partial factor method is a generally safe-sided approach, it can lead to conservative estimation of actual reliability of the structure, so inducing unnecessary and expensive interventions conflicting, especially in case of heritage buildings, with the necessity to preserve the predominant cultural value. In order to perform more 'realistic' reliability assessment, probabilistic methods must be adopted.

A probabilistic reliability assessment is based on the following steps:

1. Identification of the relevant limit states, e.g. ultimate limit state and serviceability limit state;
2. Identification of the failure modes leading to the limit state, e.g. yielding, bending, buckling, fatigue;
3. Identification of the basic variables that govern the failure mode, e.g. dimensions of the structural elements, intensity and nature of actions , material properties, model uncertainties and internal forces. Internal forces are defined by transfer functions that convert action in action effects; also transfer functions are affected by randomness, since they depend inter alia on the adopted or identified structural scheme, on actual material properties, and mechanical models.
4. Definition of appropriate limit state functions expressing in the considered cases the fundamental requirement of the theory of structural reliability:

$$E < R \tag{1}$$

where the resistance $R$ and the action effect $E$ are suitably distributed random variables. This condition leads to the fundamental forms of the limit state functions [1]:

$$G = R - E = 0 \quad \text{or} \quad Z = R/E = 1 \tag{2}$$

being $G$ the so-called *safety margin* and $Z$ the so called *safety factor*.

The essential object of the reliability theory is to assess the probability of failure:

$$p_f = P[G < 0] = P[R - E < 0] \quad \text{or, equivalently,} \quad p_f = P[Z < 1] = P[R/E < 1]. \tag{3}$$

The failure probability $p_f$ in structural engineering can be obtained using a simplified approach, based on the estimation of the reliability index $\beta$, which is a function of $p_f$,

$$\beta = -\Phi^{-1}(p_f). \tag{4}$$

5. Definition of a probability distribution function (PDF) for each random variable; when assessing an existing building is a general principle that actual characteristics of basic variables should be considered, since, at the end of the erection phase, the actual reliability of a new structure can be greater or lesser than the theoretical reliability estimated in the design phase. Furthermore an existing structure is the result of the time passage, in which aging, deterioration, environmental influences and human interventions modify the actual reliability level during the time. Therefore, actual characteristics are the result of 3 different factors: the design process, the construction process, and the history of the building. If information has been gathered investigating the actual structure, the knowledge implicit in that information might be applied to improve, or update, original information about those variables and therefore previous estimate of structural reliability. The framework for doing this is the Bayesian statistic, which uses Bayes Theorem [2]. The concept can be illustrated quite simply for the updating of PDF of $G$. If $f'_G(.)$ represents the *a priori* (conditional) PDF of $G$, and $f_v(.)$ represents the (conditional) PDF based on new (measured) data, an *a posteriori* or updated PDF $f''_G(.)$ can be derived as sketched in Fig. 1.

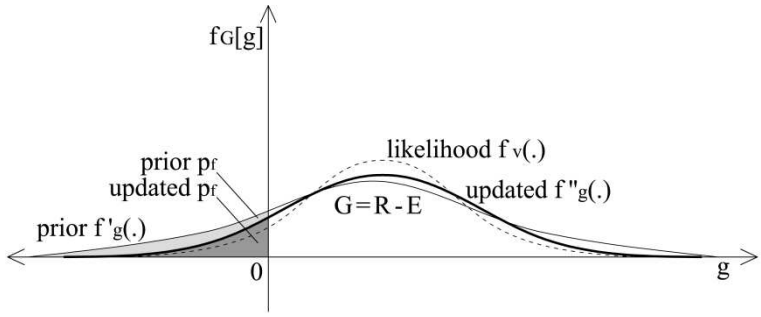


*Fig.1: Updating of $p_f$.*

6. Verification of the structural reliability; the goal for reliability analysis is to document that the target reliability reflecting the 'accepted' level of risk in terms of possible failure consequences in a given reference time period is achieved. The following verification formats are considered:

$$p_f < p_d \quad \text{or, equivalently,} \quad \beta > \beta_t \tag{5}$$

where the target reliability is represented by $p_d$ or $\beta_t$.

Obviously, different kinds of uncertainties classified regarding their source, e.g. inherent, measurements, statistical and model uncertainty are associated at each step of the procedure. Model uncertainty especially refers to the epistemic uncertainty which are implicit in the reliability assessment. For a random sample of structures, it is then possible to estimate the bias arising from model uncertainty, and treat it as a random variable, so that, for a given structure, model uncertainty manifests as a model bias. In conclusion the probabilistic reliability assessment of a particular structure will be dependable only when the potential bias due to epistemic uncertainty is negligible [3].

## 2. Challenges in assessing historical buildings

The bias can be particularly great in case of historical structures, referring with this term to important monuments but also to vernacular heritage. These buildings are designed according to empirical basis and they are mainly made of materials such as masonry and wood that present significant heterogeneity and anisotropy. Furthermore structures are complex, characterised by an high degree of indeterminacy and no distinction between decorative and structural elements. In

these circumstances failure modes, PDFs for material characteristics, and transfer functions that convert action in action effects are affected by great uncertainties. Uncertainty in transfer functions is especially great if the structure has been altered over the course of its working life. With structural alteration we referred to modifications to the structural scheme and deterioration processes. Examples of altered structures are presented in [4] and [5]. The first example is a wooden roof that has been subjected to different kinds of damages and modification. Modifications were aimed at strengthening the structure, but they actually result in additional damage. The second example is a masonry chapel whose walls have been reinforced later with counterforts. The method of bounding with counterforts may significantly vary, therefore also the behavior of the compound buttress is uncertain. Modification and degradation are seldom documented and not easily recognizable, often hidden behind a cosmetic maintenance that brings to an erroneous perception of the structural reliability. Furthermore, they usually lead to weak points and defects, e.g. heterogeneity, inclusions, voids and cracks, that have a great impact on the structural integrity. As it is shown in [6], disregarding these anomalies entails a misunderstanding of the structural scheme that leads to an unacceptable error in the reliability assessment: therefore, a preliminary careful examination of the structure is necessary in order to understand the actual structural behavior and to diagnose correctly possible causes of failure.

## 3. Flow chart for planning tests and inspection on historical structures

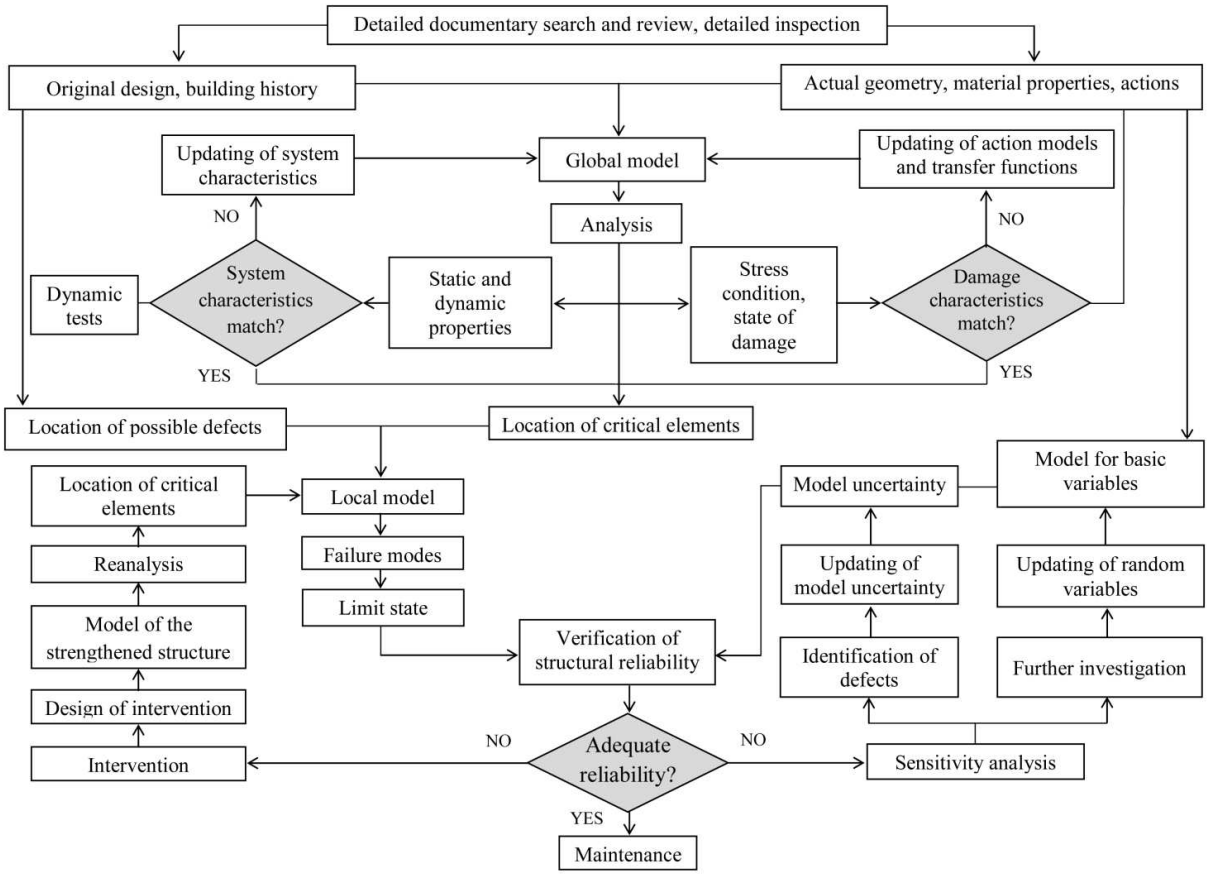


*Fig. 2: Flow chart for planning tests and inspection on historical structures.*

### 3.1 General consideration

A flow chart representing a process for planning extensive investigation on historical structures has been developed (Fig. 2). The flow chart is an extension of the ISO 13822 general flow for the assessment of existing structures when a detailed evaluation is required [7]. The ISO 13822 general flow considers the assessment as a cyclic process, from a preliminary to a more detailed appraisal.

In a detailed assessment, investigation on the structure should be carried out; however no direction for planning investigation is given, e.g. the object of the investigation, what to do with the data collected. The extension would provide the engineer with some indications about these important issues. The new flow chart has been developed considering that the main source of error in the reliability assessment of historical buildings is represented by disregarding defects due to structural alterations; therefore a strategy for their identification is suggested. The process is not compulsory and it has to be interpreted for each individual case. Investigation should be carried out mainly with non-destructive tests (NDTs), because destructive tests (DTs) endanger both the cultural value and the structural integrity of the building.

### 3.2 Detailed documentary search and review and detailed inspection

The first step of the procedure is represented by a detailed documentary search and review and a detailed inspection; information about construction techniques dating back to the period when the structure was designed, similar structures and similar building materials are collected from the existing literature, as well as documented historical actions, e.g. earthquakes and flooding. If original drawings and Codes of that period are available, they represent an abundant source of information, and a simulation of the original design can be carried out; however this is one of a kind in the assessment of historical buildings. Detailed inspection are mainly carried out through visual recognition and geometrical surveys. According with those information the original design and the building history are sketched, the actual geometry is defined, and material properties and actions are evaluated.

### 3.3 Global model and analysis

Then a global model of the structure is set up and analysed. The analysis reveals static and dynamic properties, the stress condition and the state of damage. It is possible to gather experimental data about those issues, e.g. performing dynamic tests; if theoretical and experimental information don't match, system characteristics or action models are updated until investigation and analysis results correspond. The analysis also reveals critical elements for the structural stability, e.g. non-redundant members; those elements have to be deeply investigated, especially if the history of the building points out they have been altered.

### 3.4 Local model

A local model for critical elements is set up; possible failure modes and the dominant random variables are identified, and limit states formulated. Prior probabilistic models based on the information available so far are established for each random variable, including model uncertainty. It is important to underline that vagueness regarding structural alterations may lead to rough knowledge of some random variables such as model uncertainty and transfer functions, or to unclear failure modes and associated formulation of limit states. In the first case a greater variation of the referred random variable is considered; in the second case it is necessary to account the sensitivity of $p_f$ on different failure modes and mathematical expressions of limit state functions.

### 3.5 Verification of the structural reliability

Then reliability is verified considering all the established limit states: if the alteration may lead to insufficient reliability, defects should be identified with the complementary use of several NDTs[6]. A more refined model is set up: if reliability is still not verified, it is possible to further investigate and reduce the uncertainty referred to the other random variables, or intervene on the structure. In the first case a sensitivity analysis reveals which variable has the greater impact on the reliability assessment. Investigation will be focused on that variable and results will be implemented in a Bayesian analysis in order to update prior PDFs; in the second case probabilistic methods will be used in order to assess the impact of the intervention and design the optimal operation.

# 4. Case study

## 4.1 Introduction

*Fig. 3: Front of the Medicean Aqueduct.*

A practical application of the flow chart to a relevant case study is presented below. The Medicean Aqueduct of Pisa is a masonry water work built over the 17° century by the Granduke Ferdinando First de' Medici to convey fresh water from the mountains in the nearby of Pisa to the centre of the city. Nowadays the Aqueduct is disused and in a state of decay; in view of its preservation, a detailed reliability assessment is carried out.

## 4.2 Detailed documentary search and review and detailed inspection

In-depth visual inspection and geometric surveys reveal the actual geometry of the structure, the crack pattern and the material condition. The aqueduct is a 954 spans masonry arch structure characterised by a total length of 6 km; each span is from 7 to 4 m tall, 7 m width and 1.2 m depth; the structure is affected by vertical settlements and out of plane overturning; cracks are especially observed in the key section of arches and in the upper section of pillars; since the masonry is still in good condition, we assume that it has a good quality: according to [8], it's resistance is assessed around $2.60\ N/mm^2$. The historical evolution of the building is traced back comparing maps and pictures collected through a detailed archive study: the structure has been affected by settlements since the construction phase, probably because foundation has been undersized. In order to limit the torsional movement that affects the whole structure, buttresses have been added later one each 11 arches. The historical documentation reveals that the structure was struck by 2 earthquakes that provoked the collapse of several arches, some of them reconstructed later. A study of the available literature points out that the Aqueduct rests on a layer of organic cohesive soil, characterised by a width of 3-5 m, a soft consistency and a low resistance of $\approx 0.20$ MPa.

## 4.3 Global model and analysis

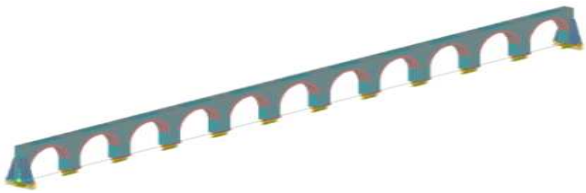

*Fig. 4: Global model.*

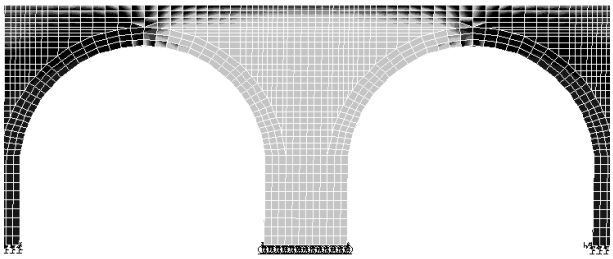

*Fig. 5: Stresses in the masonry. The lightest area corresponds to tension stresses.*

For the sake of this study, the structural analysis focused on a significant portion of the Aqueduct composed by eleven arches and bound by two buttresses. A finite element model built with Shell elements is set up and then analysed with the software SAP2000 (Fig. 4). The soil-structure interaction is simulated through a Winkler surface model. Actions are applied to the model in order to understand causes of damage. In Fig. 5, the level of stresses associated to self-weight, a vertical settlements of 40 mm and an out of plane overturning of 4° applied to the pillar's foot is represented. Tension stresses match with the frequently detected crack pattern, especially with vertical cracks in the key section of arches and horizontal cracks on pillars: therefore it is possible to state that the crack pattern is induced by the applied actions.

### 4.4 Local model

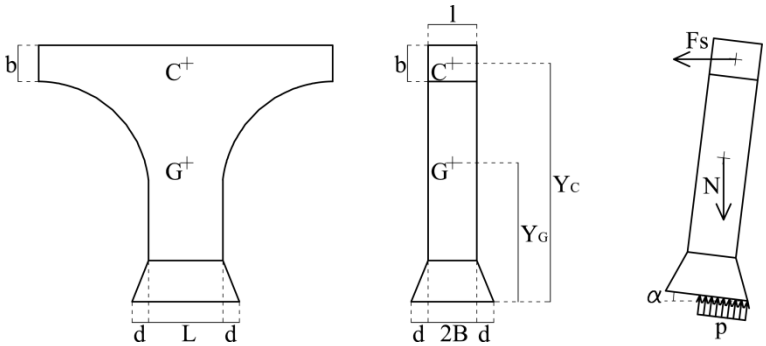


*Fig. 6: Geometric quantities and actions considered in the local model.*

In order to assess the reliability of the considered portion of Aqueduct, attention is then focused on a sequence of arches whose pillars are affected by an out of plane rotation of 4°. The arches appear in good condition and no critical crack pattern has been detected by visual inspection. Nonetheless, as the global analysis reveals, the key section of the arches maybe affected by hidden cracks. In order to assess the impact of this defect on the reliability assessment, a local model composed by a pillar and half portion of each adjacent arch is set up (Fig. 6); the height of the considered element is some order of magnitude greater than the dimension of the foundation, therefore it can be classified as a tall element. A tall structure founded on deformable soil may experience a collapse due to a particular form of instability that is governed by the deformation rather than strength properties of the soil. In this paper the problem is modelled as that an inverted pendulum [9]. The stabilizing forces are represented by the soil resistance and the masonry shear resistance in the key sections, while the overturn force is the self-weight. If cracks occurred in the key section of the arch, the contribution due to the shear resistance is limited or even nul: therefore the impact of hidden cracks on the reliability assessment have to be evaluated and cracks eventually recognized.

### 4.5 Verification of structural reliability

According to [7], the following limit state has been considered:

$$g(x) = M_R - M_E \tag{6}$$

where $M_R$ is the stabilizing reacting moment and $M_E$ is the acting moment.

$$M_R = \varphi * (B + d) * N * \left(1 - \frac{N}{N^*}\right)^{\rho} + 2 * F_S * Y_C * cos\alpha \tag{7}$$

$$N^* = q * 2 * (B + d) * (L + 2d) * \theta_q \tag{8}$$

$$F_S = \tau * l * b \tag{9}$$

$$M_E = N * Y_G * sen\alpha \tag{10}$$

We consider as deterministic the parameters $\varphi$ and $\rho$, included in the inverted pendulum model. The geometric data can be easily measured e.g. dimensions of elements, out of plane rotation $\alpha$, geometric centre and other points were the forces are applied. Other relevant parameters are considered random.

Each random variable is probabilistically described by a prior PDF based on detailed documentary search and review and detailed inspection. According to [10], a normal distribution is frequently used as a theoretical model of self-weight, strength and geometric properties if the coefficient of variation $V < 0.20$ and the skewness $a \approx 0$. Also [11] suggests that a normal distribution cannot be rejected for a wide variety of soil properties and geometric dimension. Therefore a normal distribution is chosen for the following parameters: soil resistance, self-weight and geometric properties of the foundation. A Log-normal distribution is chosen, instead, for masonry shear resistance and for model uncertainty [11].

The pillar is characterised by a square section whose area is given by $A = 2B\,L$. The pillar stands on a foundation whose dimensions are uncertain but larger than the pillar section. Therefore an additional geometric parameter $d$ is introduced, that represents the enlargement of the foundation compared to the basis of the pillar. The PDF that describes the geometric properties of the foundation is characterised by $\mu_d = 0.40\ m$ and $V_d = 0.15$.

The inner core of the masonry, revealed by several collapses looks as a heterogeneous historic masonry: the PDF describing its self-weight is characterised by $\mu_N = 470\ KN$, and $V_N = 0.10$. According to [8], $\mu_\tau = 5.60\ N/cm^2$ and $V_\tau = 0.10$ are assumed for the PDF describing the masonry shear strength.
The soil resistance, which is affected by higher coefficient of variation, can be described by a PDF with $\mu_q = 250\ KN/m^2$ and $V_q = 0.20$, as suggested in [11]. The soil bearing capacity is assumed to be uniformly distributed with constant intensity over a part of the surface of the foundation, such that its centre coincides with the point of application of the external load [9]. However this assumption is hardly verified if the foundation-soil interface presents some heterogeneities.
Therefore a variable $\theta_q$ that takes into account this model uncertainty referred to the soil resistance is introduced; $\mu_\theta = 1$ and $V_\theta = 0.15$ are assumed for its PDF. Deterministic values and prior probabilistic models are presented in Tables 1 and 2.

*Table 1: Random variables.*

| VAR | DIST | $\mu$ | $V$ |
|---|---|---|---|
| $q$ | Normal | 250 $KN/m^2$ | 0.2 |
| $d$ | Normal | 0.40 $m$ | 0.15 |
| $N$ | Normal | 470 $KN$ | 0.1 |
| $\tau$ | Log-Normal | 56 $KN/m^2$ | 0.1 |
| $\theta_q$ | Log-Normal | 1 | 0.15 |

*Table 2: Deterministic parameters.*

| PAR | VALUE | PAR | VALUE |
|---|---|---|---|
| $\varphi$ | 0.5 | $\alpha$ | 4 ° |
| $\rho$ | 1 | $b$ | 0.88 $m$ |
| $B$ | 0.60 $m$ | $l$ | 1.20 $m$ |
| $L$ | 1.80 $m$ | $Y_C$ | 5.78 $m$ |
| $Y_G$ | 3.77 $m$ | | |

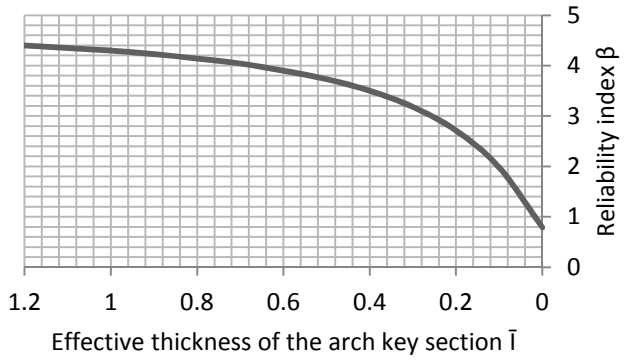


*Fig. 7: The reliability index $\beta$ associated to the effective thickness of the arch key section $\bar{l}$ .*

The reliability analysis is carried out with the software VAP, applying the FORM method. Verification of the structural reliability is firstly based on prior information: the estimated reliability index $\beta = 4.40$, corresponding to a probability of failure $p_f \approx 5.3 \cdot 10^{-6}$, points out that, despite the out of plane rotation of 4°, the reliability of the element is sufficient. However hidden cracks may occur in the key sections of arches: in this case a reduced shear resistance should be considered due to the effective thickness $\bar{l}$ of the key section. A parametric study evaluating the impact of the parameter $\bar{l}$ on the reliability assessment is performed. Results shown in Fig. 7 reveals that the considered parameter has a dramatic impact on the reliability assessment: as $\bar{l}$ decreases from $1.20\ m$ to zero, the reliability index β ranges from 4.40 to 0.79, corresponding to a probability of failure $p_f \approx 2.1 \cdot 10^{-1}$. Therefore if long cracks occur in the key sections, the reliability of the element is significantly reduced. In order to obtain dependable estimate of the structural reliability, it is necessary firstly to recognize alteration and define the actual behaviour of the structure; investigation on the actual condition of the key sections will be carried out with NDTs, e.g. sonic and radar tests. If investigation results will reveal that the key sections are intact, the structure is reliable and no further study is required, but it does not seem the case; if the extensive crack pattern is confirmed, an intervention is necessary in order to improve the reliability of the structural

element; where only few signs of decay are detected, a more refined reliability assessment will be performed, considering the effective thickness $\bar{l}$ of the key section. In this last case, the uncertainty related to the updated model will be established and considered as a random variable. If reliability is still not verified, it is possible to intervene on the structure or further investigate. Investigation can be planned with a pre-posterior Bayesian Analysis.

## 5. Conclusion

Probabilistic methods and Bayesian updating techniques are often invoked in order to perform more 'realistic' reliability assessment of existing structures. However if structural alteration are not firstly recognized, the probabilistic reliability assessment is not dependable. A procedure aimed at increasing the robustness of the Bayesian Analysis against structural alteration is suggested. The experimental research is especially based on the following steps:

1. Definition of the building history, in order to locate possible defects;
2. Global analysis, in order to recognize critical elements for the structural stability;
3. Evaluation of the impact of the defects on the reliability assessment.

An application to a relevant case study has been presented. Results reveals that the crack pattern should be carefully recognized, because it has a great effect on the assessment: in fact, the $\beta$ value strongly reduces as the crack length increases. It is so confirmed that probabilistic methods represent a powerful tool in assessing existing structures, provided that the sensitiveness of the result to uncertainty regarding basic variables and limit states formulation are duly taken into account.

## 6. Acknowledgements

The study of the Medicean Aqueduct is carried out in the framework of the Leonardo Da Vinci Project CZ/13/LLP-LdV/TOI/134014: *"Innovation Transfer in Risk Assessment and Management of Aging Infrastructures"*.

## 7. References

[1] DIAMANTIDIS D., HOLICKY M., *Innovative methods for the assessment of existing structures*, Czech Technical University in Prague, Klokner Institute, 2012.

[2] MELCHERS R.E., *Structural reliability analysis and prediction*, John Wiley and Sons, 1999.

[3] REID S., "Calculation and interpretation of realistic probability of failure", *Ships and Offshore Structures*, 4(3), 197-205, 2009.

[4] BARTHEL R., MAUS H., "Analysis and repair of historical roof structures: two examples, two different concepts", *First International Congress on Construction History*, Madrid, 2003.

[5] HUERTA S., "The safety of masonry buttresses", *Engineering History and Heritage*, 163, Pages 3-24, February 2010.

[6] MARSILI F., CROCE P., ECKFELDT L., "Increasing the robustness of the Bayesian Analysis for the reliability assessment of existing structures", *Int. Probabilistic Workshop* 2014.

[7] ISO13822, *Basis for design of structures. Assessment of existing structures*, ISO, Geneva, 2001.

[8] NTC2008, *Norme tecniche per le Costruzioni*, Rome, 2008.

[9] DESIDERI A., RUSSO G., VIGGIANI C., "La stabilità di torri su terreni deformabile", *Rivista Italiana di Geotecnica*, 1997.

[10] HOLICKY M., *Introduction to Probability and Statistics for Engineers*, 2014.

[11] JCSS 2011, "JCSS Probabilistic model code", *Joint Committee on Structural Safety*, 2011.

[12] CROCE P., HOLICKY M., *Operational methods for the assessment of existing structures*, TEP, Pisa, 2013.